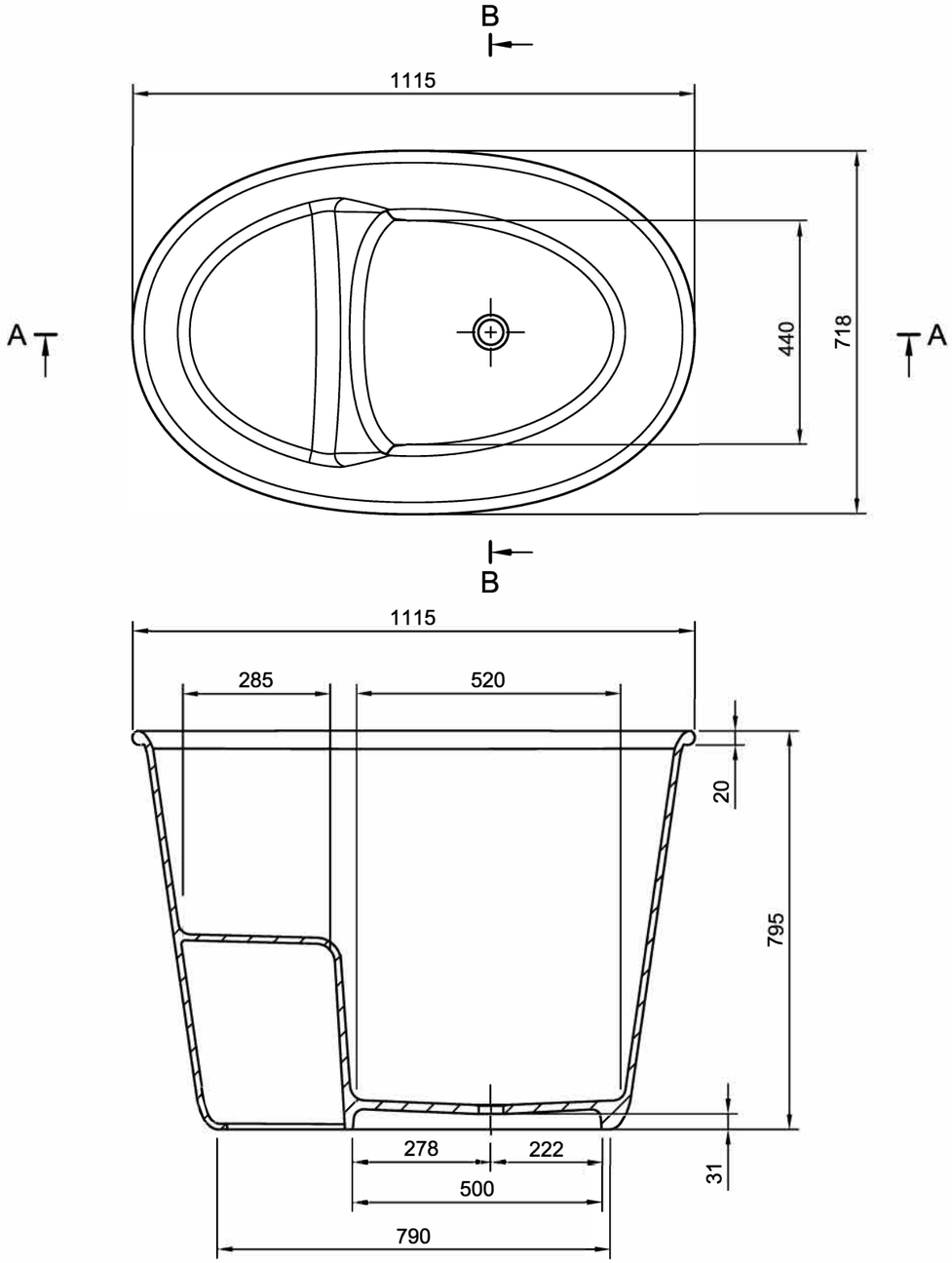

A-A (1:12)

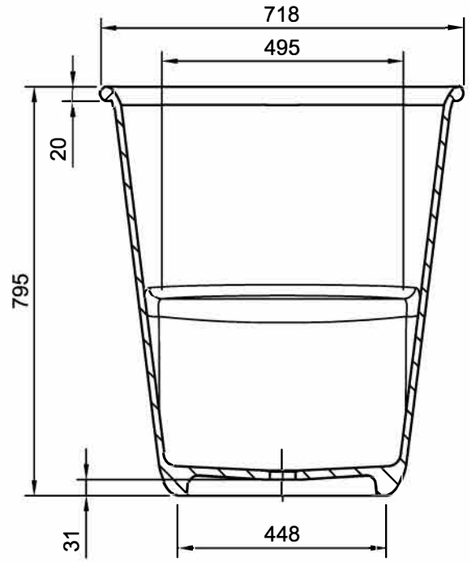

B-B (1:12)

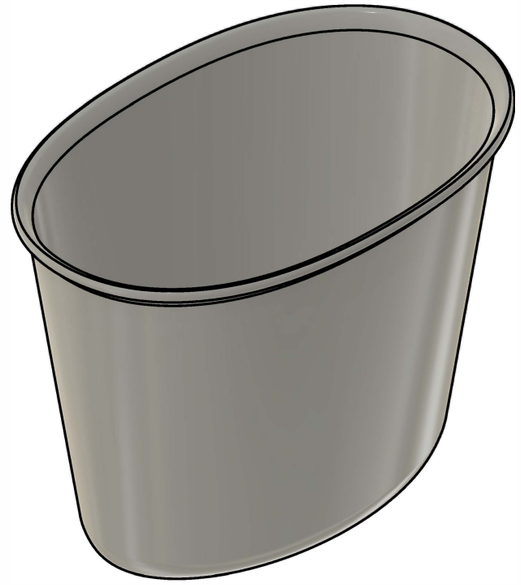

TOLERANCES ON ALL DIMENSIONS INDICATED ± 2 % PER 1000MM

Scale	Weight	Created by	Approved by
1:12 **on A3**	70 kg		

ALL DIMENSIONS ARE IN _ mm

BOUTIQUE BATHS
Handcrafted Excellence

Title: Shinshi Bath (SHI001)

Document status

DWG No.: 1 of 1

REV	DRAWN	DATE	PARTICULARS
1			

Rev.	Date of issue	Sheet
1	15/08/2025	1/1