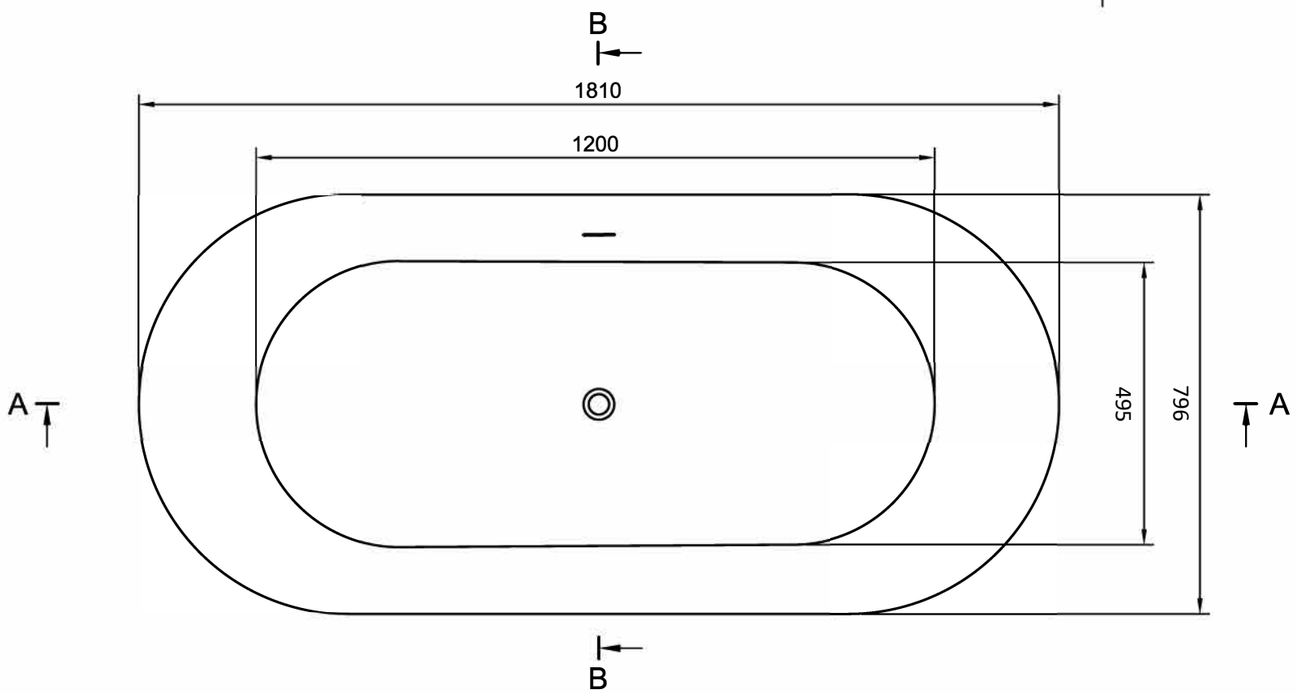



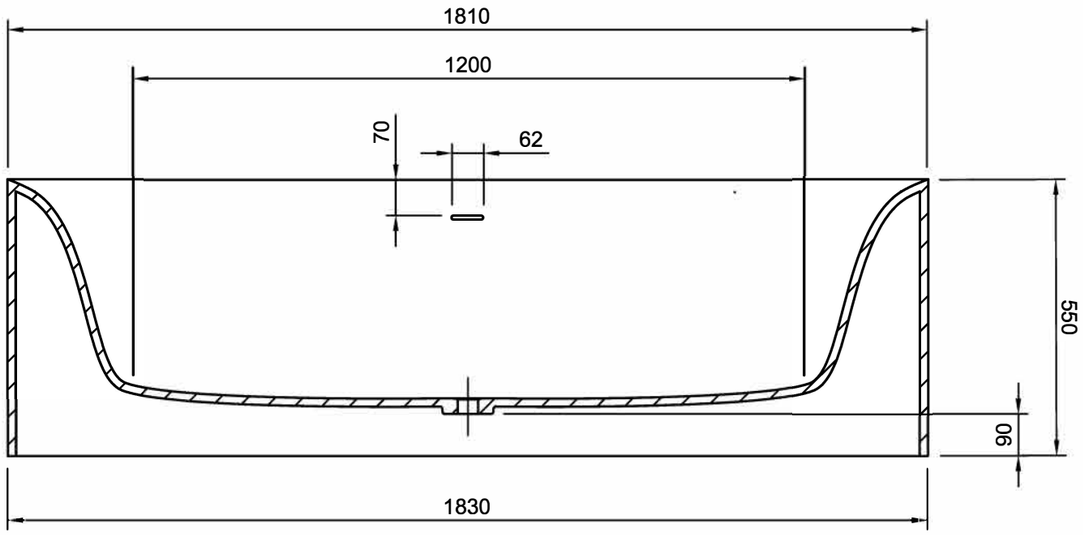

A-A (1:12)

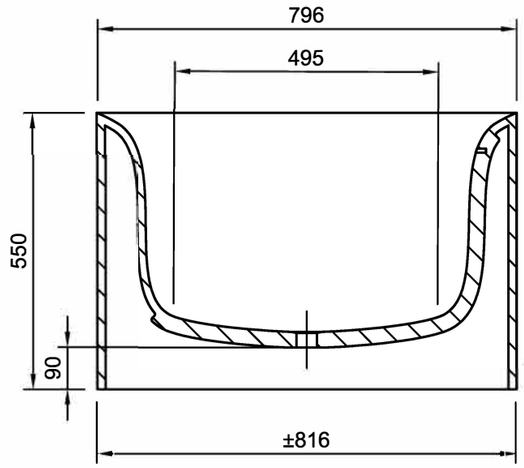

B-B (1:12)

TOLERANCES ON ALL DIMENSIONS INDICATED ± 2 % PER 1000MM				Scale 1:12 **on A3**	Weight 126 kg	Created by	Approved by
						ALL DIMENSIONS ARE IN _ mm	Document status
				BOUTIQUE BATHS *Handcrafted Excellence*		Title Omina Bath (OMI001)	DWG No. 1 of 1
1							Rev. 1 / Date of issue 15/01/2025 / Sheet 1/1
REV	DRAWN	DATE	PARTICULARS				